Additel

Metrology Made Simple



ADT286
Calibration Manual

ADT286 Calibration Manual

Table of Contents

1.0 - Scope....2
2.0 - Recommended Equipment and Specifications....2
3.0 - Initial Operating Conditions....3
4.0 - General Diagram and Description....3
5.0 - Date & Time....4
6.0 - Zero Procedure....4
6.1 - Voltage Zero....4
6.2 - Current Zero....5
6.3 - Resistance Zero....5
6.4 - RTD Zero....5
6.5 - Thermistor Zero....6
7.0 - Electrical Verification....6
7.1 - DC Voltage Measure....7
7.2 - DC Current Measure....8
7.3 - Resistance Measure....9
7.4 - RTD Measure....10
7.5 - Thermistor Measure....10
8.0 - Electrical Calibration....11
8.1 - Voltage Calibration....11
8.2 - Current Calibration....11
8.3 - Resistance Calibration....12

1.0 - Scope

The Additel ADT286 is a multifunction reference thermometer readout device. This device is able to measure and calibrate SPRT's, RTD's, thermistors, and thermocouples. The capabilities of this unit include a 1 parts per million (PPM) resistance ratio accuracy on Channel 1, 8.5 digital DC multimeter, and measurements of up to 82 channels. The functions of this unit include built in automatic temperature control, data collection, and coefficient generation. The readout is equipped with a 10.1 inch touch screen display and multiple means of communication (Bluetooth, WIFI, USB, and Ethernet). This multifunction reference thermometer readout is an innovative device with the capability, functionality, and automation that proves beneficial to any calibration laboratory.

2.0 - Recommended Equipment and Specifications

Equipment	Specification/ Description	Recommended Model/ Item Number
Electrical Calibrator	Applicable to the ADT286 electrical ranges/accuracy.	Fluke 5730A or equivalent
Standard Reference Resistors	Applicable to the ADT286 resistance ranges/accuracy. 5 parts per million (PPM).	ADT280-RS-25 ADT280-RS-50 ADT280-RS-100 ADT280-RS-200 ADT280-RS-400 ADT280-RS-1K ADT280-RS-2K ADT280-RS-4K ADT280-RS-10K
Resistance Decade Box	Applicable to the ADT286 resistance ranges/accuracy. Should be characterized using a Keysight 3458A or equivalent.	-
Low Thermal Test Leads	Three sets of test leads used for electrical measurement. Equipped with red, black and grounding connections.	Fluke 5440A-7002 or equivalent
Resistor Plugs	Four gold plated plugs to connect the test leads to the standard reference resistors.	-
Short Circuit Fixture	One short circuit connection with four plugs used for zeroing.	-

3.0 - Initial Operating Conditions

- The 286 has been turned ON and warmed for at least 2 hours.
- The 286 and electrical calibrator (5730A) should be plugged into the same power outlet in order to prevent any grounding loops.
- Ensure that the lab environment is maintained at 23°C ± 2°C with less than a 70% relative humidity.
- The electrical calibrator (5730A) is plugged in and warmed for at least 1 hour. Also ensure the DC has been zeroed within the last 24 hours.
- Allow measurements to stabilize for about 1-2 minutes.
- The short circuit fixture is used to source the zero values.
- The zero procedure, electrical verification, and electrical calibration are conducted on REF1 only due to the fact that REF1 and REF2 share the same calibration data.

4.0 - General Diagram and Description

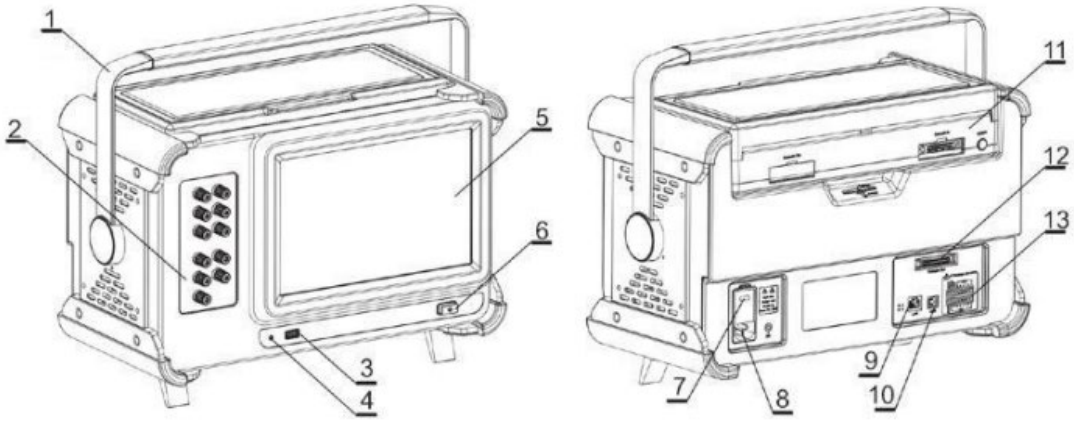

No.	Name	Description
1	Handle	Can be rotated to various positions
2	Input terminals (REF1, REF2)	2 front channel measurements which can be connected to devices
3	USB port (Type A)	Connects to USB drive for data export and system updates
4	Indicator light	Indicates whether or not the thermometer is in standby mode
5	Touch screen display	Main screen used to navigate and display the functions of the device
6	Power button	Press to turn the unit ON/OFF
7	Power specification (100, 120, 230, 240 VAC)	Displays the power voltage of the unit
8	AC port	Connects to power supply cable
9	Ethernet port (RJ45)	Connects to Ethernet cable for internet access
10	USB port (Type B)	Connects to USB cable for computer communication
11	Signal scanner	Temperature or process scanners which can be embedded into the unit
12	Cascade DSUB port	Connects cable for cascade wiring of signal scanners
13	DIO port	Connects cable for input and export of digital quantity

Note: This calibration manual is only for the base model ADT286. The ADT286-TS and ADT286-PS modules are not included. A separate calibration manual has been made for these modules.

5.0 - Date & Time

1) Plug in the power cord to the AC port (back) and press the **Power Button** (front) to turn the unit ON.

2) Press the **List Icon** (top right) to open up the options.

3) Press **Setup** then press **Personalization**.

4) Press **Date & Time** to view the following parameters: Time, Date, Date Format, Date Separator, 24-Hour Time, and Time Zone. If necessary, use the touch screen display to adjust any of these parameters.

5) Press the **Back Icons** to return to the main display.

6.0 - Zero Procedure

1) Press the **List Icon** > **Setup** > **Services** > **System Calibration**.

2) Input the Calibration Password as **123456** then press the **Check Icon** to confirm.

3) Press **Zero**. The following section is divided by function: Voltage, Current, Resistance, RTD, and Thermistor.

4) Ensure that the channel is set to REF1 using the left/right arrows and plug the short circuit fixture into the front REF1 port of the 286.

6.1 - Voltage Zero

1) Press the function **Voltage** to begin zeroing the voltage ranges.

2) Press the range **(-100~100)mV**. Press the **Zero Icon** (bottom right) to save the Offset Value and Date. Press the **Back Icon** (top right) to return to the voltage zero functions.

3) Repeat the previous step for the other voltage ranges: ±1V, ±10V, and ±50V.

4) Press the **Back Icon** to return to the general zero functions.

6.2 - Current Zero

1) Press the function **Current** to begin zeroing the current ranges.

2) Press the range **(-100~100)µA**. Press the **Zero Icon** to save the Offset Value and Date. Press the **Back Icon** to return to the current zero functions.

3) Repeat the previous step for the other current ranges: ±1mA, ±10mA, and ±100mA.

4) Press the **Back Icon** to return to the general zero functions.

6.3 - Resistance Zero

1) Press the function **Resistance** to begin zeroing the resistance ranges.

2) Press the range **(0~100)Ω 2W**. Press the **Zero Icon** to save the Offset Value and Date. Press the **Back Icon** to return to the resistance zero functions.

3) Repeat the previous step for the other resistance ranges: (0~100)Ω 4W, (0~1)kΩ 2W, (0~1)kΩ 4W, (0~10)kΩ 2W, (0~10)kΩ 4W, (0~100)kΩ 2W, (0~100)kΩ 4W, (0~1)MΩ 2W, (0~1)MΩ 4W, (0~10)MΩ 2W, (0~10)MΩ 4W, (0~100)MΩ 2W, and (0~100)MΩ 4W.

4) Press the **Back Icon** to return to the general zero functions.

6.4 - RTD Zero

1) Press the function **RTD** to begin zeroing the RTD ranges.

2) Press the range **(0~100)Ω 2W**. Press the **Zero Icon** to save the Offset Value and Date. Press the **Back Icon** to return to the RTD zero functions.

3) Repeat the previous step for the other RTD ranges: (0~100)Ω 3W, (0~100)Ω 4W, (0~400)Ω 2W, (0~400)Ω 3W, (0~400)Ω 4W, (0~4)kΩ 2W, (0~4)kΩ 3W, and (0~4)kΩ 4W.

4) Press the **Back Icon** to return to the general zero functions.

6.5 - Thermistor Zero

1) Press the function **Thermistor** to begin zeroing the thermistor ranges.

2) Press the range **(0~10)kΩ 2W**. Press the **Zero Icon** to save the Offset Value and Date. Press the **Back Icon** to return to the thermistor zero functions.

3) Repeat the previous step with the other thermistor range: (0~10)kΩ 2W.

7.0 - Electrical Verification

1) Using the low thermal test leads, connect the ADT286 and electrical calibrator (5730A) as shown in the diagram.

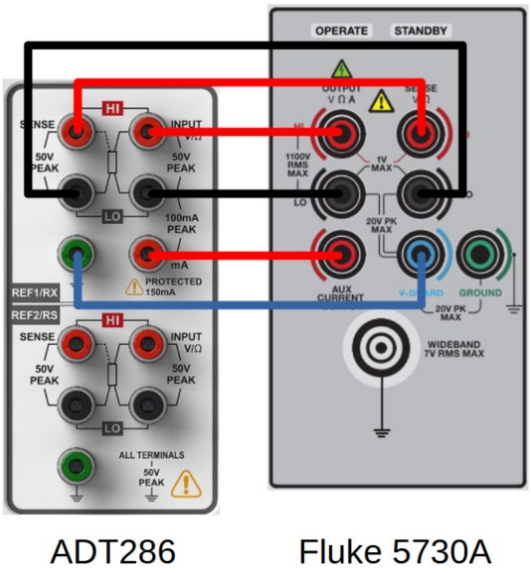

ADT286 Fluke 5730A

2) Press the **List Icon** then select **Multichannel Thermometer**.

3) Press the **Tools Icon** (top left) and select **Display Settings**.

4) Set the Temperature Units to **°C**, Sampling Rate to **Slow**, Display Digits to **9**, Temperature Display Digits to **9**, Filter to **1**, and Graph Type to **OFF**. Press the **Check Icon** to confirm the display settings.

5) Press the **Tools Icon** again and select **Channel Settings**. These settings allow the operator to select the function, range, and wire count for either of the REF connections. Ensure that REF1 is enabled by selecting **ON**.

7.1 - DC Voltage Measure

1) Press **Function** under the REF1 column. Select the function as **Voltage** and the appropriate range.

Press the **Check Icon** to confirm the settings. Ensure that the displayed channel is set to REF1.

2) Verify the values in the table.

DC Voltage Measure			
Range (V)	Test Point (V)	Reference	Specification (V)
100 mV	-100 mV	5730A	±0.001800 mV
	0 mV	Short Circuit	±0.000400 mV
	100 mV	5730A	±0.001800 mV
1 V	-1 V	5730A	±0.00001460 V
	0 V	Short Circuit	±0.00000060 V
	1 V	5730A	±0.00001460 V
10 V	-10 V	5730A	±0.00014680 V
	0 V	Short Circuit	±0.00000080 V
	10 V	5730A	±0.00014680 V
50 V	-50 V	5730A	±0.00195000 V
	0 V	Short Circuit	±0.00005000 V
	50 V	5730A	±0.00195000 V

7.2 - DC Current Measure

1) Set the function as **Current** and the select the appropriate range.

2) Verify the values in the table.

DC Current Measure			
Range (A)	Test Point (A)	Reference	Specification (A)
100 uA	-100 uA	5730A	±0.006600 uA
	0 uA	Short Circuit	±0.000600 uA
	100 uA	5730A	±0.006600 uA
1 mA	-1 mA	5730A	±0.00006100 mA
	0 mA	Short Circuit	±0.00000100 mA
	1 mA	5730A	±0.00006100 mA
10 mA	-10 mA	5730A	±0.00086000 mA
	0 mA	Short Circuit	±0.00006000 mA
	10 mA	5730A	±0.00086000 mA
100 mA	-50 mA	5730A	±0.00810000 mA
	0 mA	Short Circuit	±0.00010000 mA
	50 mA	5730A	±0.00810000 mA

7.3 - Resistance Measure

1) Set the function to **Resistance** and select the appropriate range. Ensure the wires are set to the correct configuration (2 or 4) and the appropriate reference is being used. The ADT280-RS setup is displayed in the following diagram.

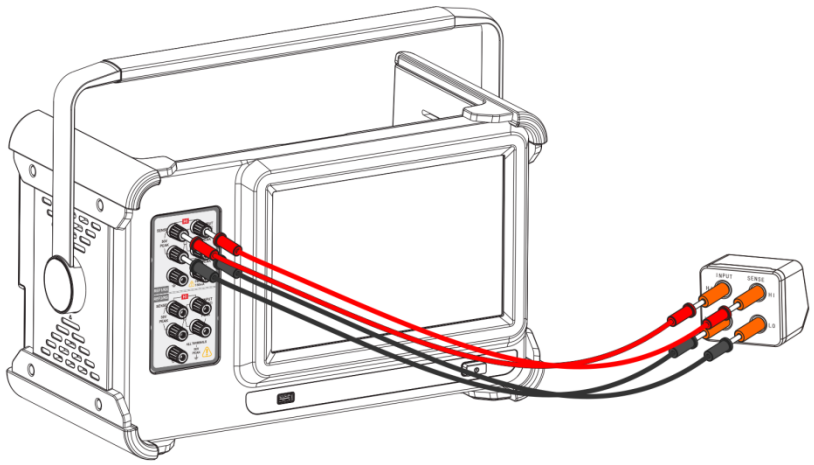

4) Verify the values in the table.

Resistance Measure			
Range (Ω)	Test Point (Ω)	Reference	Specification (Ω)
100 Ω (4-Wire)	25 Ω	ADT280-RS-25	±0.000550 Ω
	50 Ω	ADT280-RS-50	±0.000950 Ω
	100 Ω	ADT280-RS-100	±0.001750 Ω
1 kΩ (4-Wire)	0.025 kΩ	ADT280-RS-25	±0.00000068 kΩ
	0.100 kΩ	ADT280-RS-100	±0.00000180 kΩ
	1.000 kΩ	ADT280-RS-1K	±0.00001530 kΩ
10 kΩ (4-Wire)	0.1 kΩ	ADT280-RS-100	±0.00000550 kΩ
	1.0 kΩ	ADT280-RS-1K	±0.00001900 kΩ
	10.0 kΩ	ADT280-RS-10K	±0.00015400 kΩ
100 kΩ (4-Wire)	100 kΩ	5730A	±0.00153000 kΩ
1 MΩ (4-Wire)	1 MΩ	5730A	±0.00004100 MΩ
10 MΩ (4-Wire)	10 MΩ	5730A	±0.00100990 MΩ
100 MΩ (2-Wire)	100 MΩ	5730A	±0.05040000 MΩ

7.4 - RTD Measure

1) Set the function to **RTD** and select the appropriate sensor type range.

2) Verify the values in the table.

RTD Measure			
Range (Ω)	Test Point (Ω)	Reference	Specification (Ω)
100 Ω (4-Wire)	25 Ω	ADT280-RS-25	±0.000375 Ω
	50 Ω	ADT280-RS-50	±0.000750 Ω
	100 Ω	ADT280-RS-100	±0.001500 Ω
400 Ω (4-Wire)	25 Ω	ADT280-RS-25	±0.000400 Ω
	100 Ω	ADT280-RS-100	±0.001500 Ω
	200 Ω	ADT280-RS-200	±0.003000 Ω
	400 Ω	ADT280-RS-400	±0.006000 Ω
4 kΩ (4-Wire)	0.1 kΩ	ADT280-RS-100	±0.00000500 kΩ
	0.4 kΩ	ADT280-RS-400	±0.00000600 kΩ
	1.0 kΩ	ADT280-RS-1K	±0.00001500 kΩ
	2.0 kΩ	ADT280-RS-2K	±0.00003000 kΩ
	4.0 kΩ	ADT280-RS-4K	±0.00006000 kΩ

7.5 - Thermistor Measure

1) Set the function to **Thermistor** and the sensor type to **Auto Range**.

2) Verify the values in the table.

Thermistor Measure (Auto) – 4 Wire		
Test Point (kΩ)	Reference	Specification (kΩ)
10	ADT280-RS-10K	±0.00040
100	5730A	±0.00400
1000	5730A	±0.10000

8.0 - Electrical Calibration

1) Press the **List Icon** > **Setup** > **Service** > **System Calibration**.

2) Input the Calibration Password as **123456** then press the **Check Icon** to confirm.

3) The calibration functions are divided into the following sections: Voltage, Current, Resistance, and CJC. Note: CJC is only used for the ADT286-TS and ADT286-PS.

8.1 - Voltage Calibration

1) Press the function **Voltage** and select the range **(-100~100)mV**. Press the **Play Icon** to begin voltage calibration.

2) The first row should be highlighted. Source the first calibration point. If necessary, adjust the Standard Value. Press the **Next Icon** to record the Indication Value. Repeat this step for the other calibration point.

3) After recording the last indication value, press the **Save Icon** then **OK** to save and confirm the calibration data.

4) Repeat the previous steps for the other voltage ranges: (-1~1)V, (-10~10)V, and (-50~50)V.

5) Press the **Back Icon** to return to the other calibration functions.

8.2 - Current Calibration

1) Press the function **Current** and select the range **(-100~100)µA**. Press the **Play Icon** to begin the current calibration.

2) The first row should be highlighted. Source the first calibration point. If necessary, adjust the Standard Value. Press the **Next Icon** to record the Indication Value. Repeat this step for the other calibration point.

3) After recording the last indication value, press the **Save Icon** then **OK** to save and confirm the calibration data.

4) Repeat the previous steps for the other current ranges: (-1~1)mA, (-10~10)mA, and (-100~100)mA.

5) Press the **Back Icon** to return to the other calibration functions.

8.3 - Resistance Calibration

1) Press the function **Resistance** and select the range **(0~100)Ω**. Press the **Play Icon** to begin resistance calibration.

2) The first row should be highlighted. Source the first calibration point. If necessary, adjust the Standard Value. Press the **Next Icon** to record Indication Values for the DMM Resistance, RTD and/or Thermistor. Repeat this step for the other calibration point.

3) After recording the last indication value, press the **Save Icon** then **OK** to save and confirm the calibration data.

4) Repeat the previous steps for the other resistance ranges: (0~1)kΩ, (0~10)kΩ, (0~100)kΩ, (0~1)MΩ, (0~10)MΩ, and (0~100)MΩ.